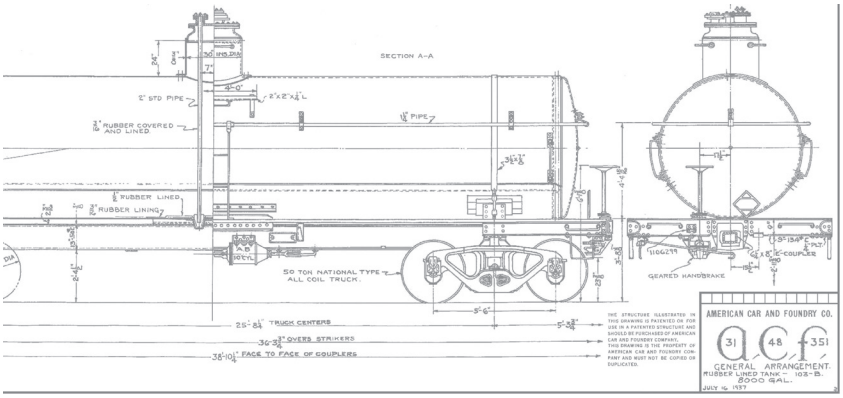

RESIN CAR WORKS

R.C.W.

P.O. BOX 42
BYRON, IL 61010

Freight Cars of Every Description

ORDER FORM

Item No.	Description	Qty	Unit Price	Extended Price

	Subtotal from cars ordered above			
	U.S. Shipping: one car kit, $6.00 plus $4.00 for each additional car kit.*			
	Insurance (Optional - See information and table below)			
	Subtotal including shipping and insurance			
	Illinois residents add 7.25% sales tax to the the Subtotal in the line above			
	Total (Please make checks payable to Resin Car Works.)			

Please print clearly to fill out both the information requested at the right and the mailing label below.

* Please see website for orders to **Canada** or other countries. Orders for **Decals** ship free.

Resin Car Works is not responsible for lost, damaged or stolen packages. If you wish, insurance can be purchased at the following USPS rates:

Amount for Merchandise Insurance Coverage Desired	Fee[1]
$0.01 - $50.00	$2.65
50.01 - 100.00	3.40
100.01 - 200.00	4.30
200.01 - 300.00	5.65
300.01 - 400.00	7.10
400.01 - 500.00	8.60
500.01 - 600.00	11.50

Name: _____

Address: _____

City: _____

State: _____ **Zip:** _____

E-Mail Address: _____

Phone Number: _____

The Minions thank you for your order!